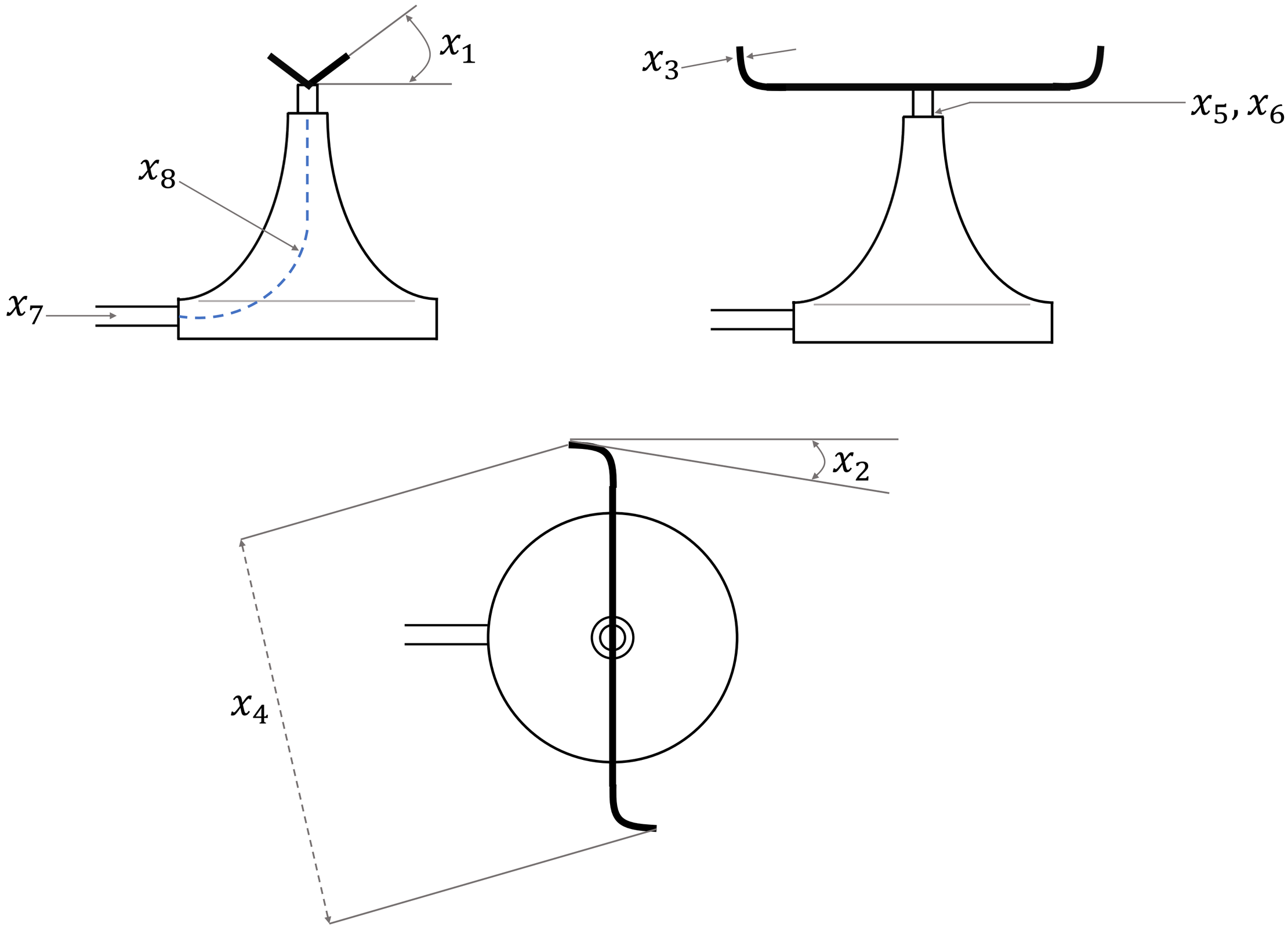
x_1
x_8
x_7
x_3
x_5, x_6
x_2
x_4